6. Front Drive Shaft

A: REMOVAL

1) Disconnect the ground cable from the battery.
2) Jack-up the vehicle and support with rigid racks. Then remove the front hubcaps and wheels.
3) Flatten the tab of the axle nut.
4) Depress the brake pedal and remove the axle nut using a socket wrench.

CAUTION:
Remove the wheel from the vehicle before loosening the axle nut. Failure to follow this rule may damage the wheel bearings.

5) Remove the stabilizer link from the transverse link.
6) Disconnect the transverse link from the housing.
7) Remove the front drive shaft assembly. If it is hard to remove, use ST1 and ST2.

ST1 926470000 AXLE SHAFT PULLER
ST2 28099PA110 AXLE SHAFT PULLER PLATE

CAUTION:
- **Be careful not to damage the oil seal lip and tone wheel when removing the front drive shaft.**
- **When replacing the front drive shaft, also replace the inner oil seal.**

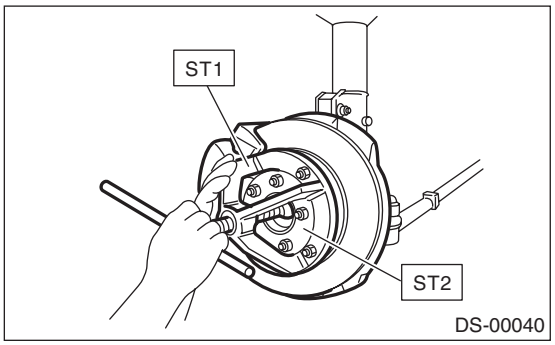

8) Using a bar, remove the front drive shaft from transmission.

CAUTION:
Be careful not to damage the holder area.

B: INSTALLATION

1) Using the ST, replace the differential side retainer oil seal with a new seal.

ST 18675AA000 DIFFERENTIAL SIDE OIL SEAL INSTALLER

NOTE:
After pulling out the drive shaft, be sure to replace with a new oil seal.

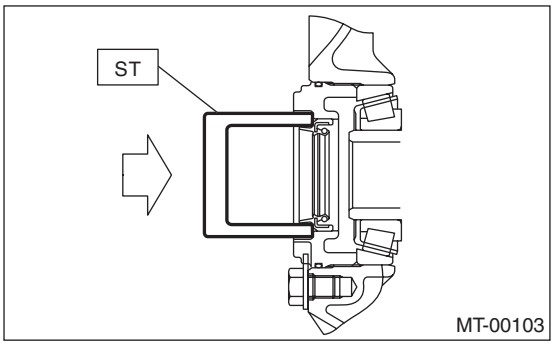

2) Insert the BJ into hub splines.

CAUTION:
Be careful not to damage the inner oil seal lip and tone wheel.

3) Using ST1 and ST2, pull the drive shaft to the specified location.

ST1 922431000 AXLE SHAFT INSTALLER
ST2 927390000 ADAPTER

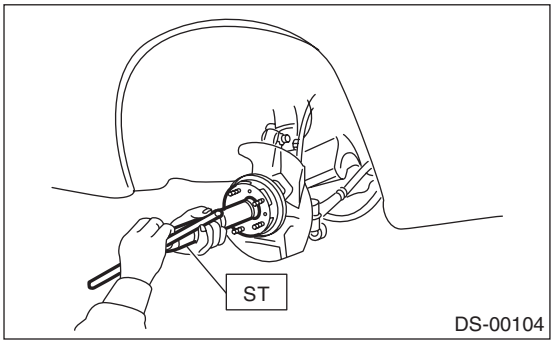

4) Tighten the axle nut temporarily.
5) Using the ST, install the front drive shaft to transmission.

ST 28399SA010 OIL SEAL PROTECTOR

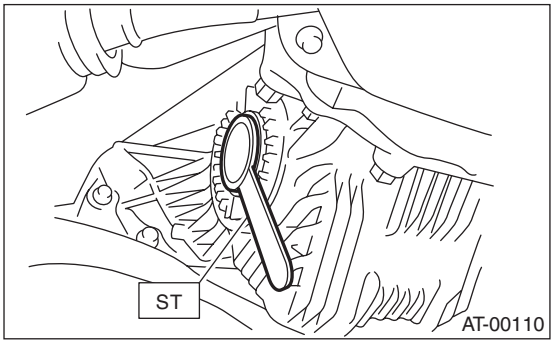

6) Connect the transverse link to the housing.

Tightening torque:
50 N·m (5.1 kgf-m, 37 ft-lb)

7) Install the stabilizer bracket.

8) While pressing the brake pedal, tighten the axle nut to the specified torque.

Tightening torque:
220 N·m (22.4 kgf-m, 162 ft-lb)

CAUTION:

- **Be sure to tighten the axle nut before installing the wheel to the vehicle. If the wheel is installed while the axle nut is loose, the wheel bearings may be damaged when the tires contact the ground.**
- **Do not overtighten it as this may damage the wheel bearing.**

9) After tightening axle nut, lock it securely.

C: DISASSEMBLY

1. BJ+PTJ-TYPE

1) Place alignment marks on the shaft and outer race.

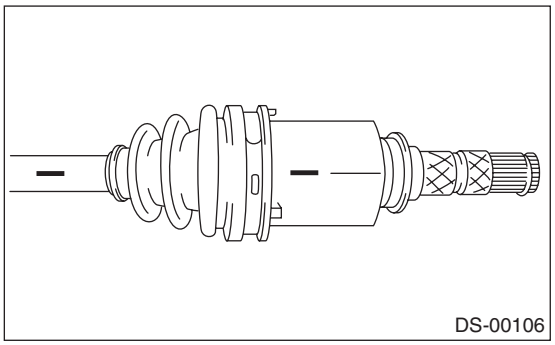

2) Remove the PTJ boot band and boot.

CAUTION:
Be careful not to damage the boot.

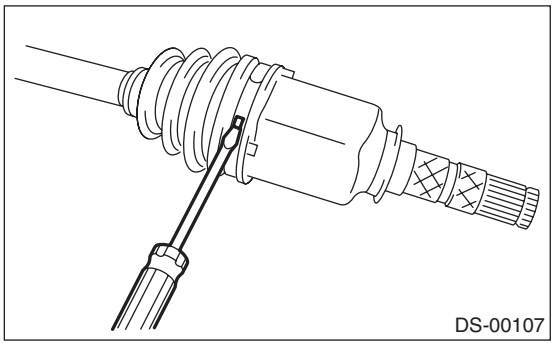

3) Remove the snap ring from the PTJ outer race using a screwdriver.

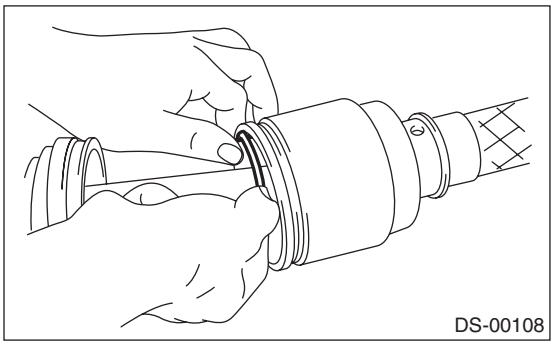

4) Remove the PTJ outer race from shaft assembly.

5) Wipe off grease.

CAUTION:
The grease is a special type of grease. Do not mix with other grease.

6) Place alignment marks on the roller kit and trunnion.

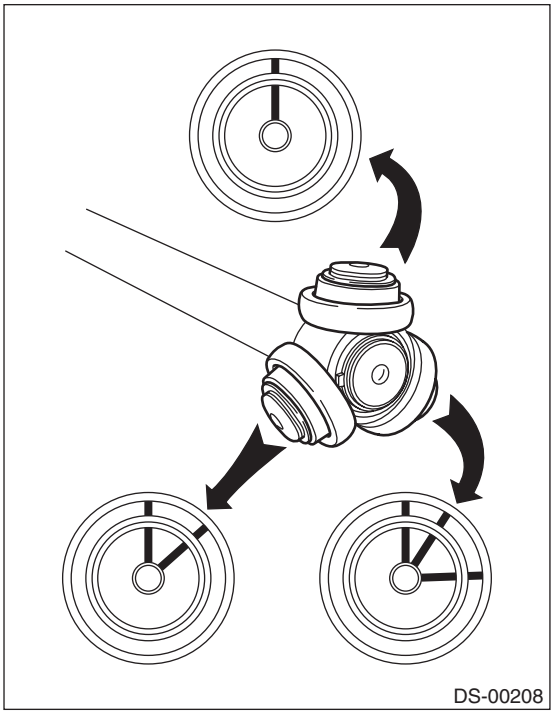

7) Remove the roller kit from trunnion.

CAUTION:
Be careful with the roller kit position.

8) Place alignment marks on the trunnion and shaft.

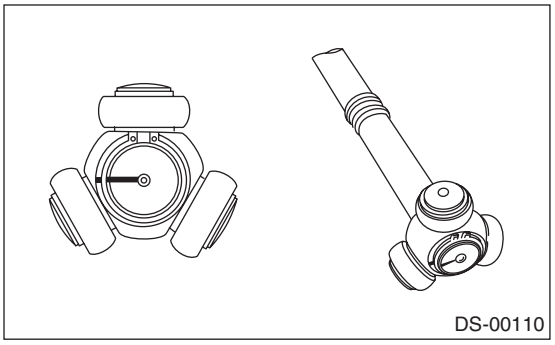

9) Remove the snap ring and trunnion.

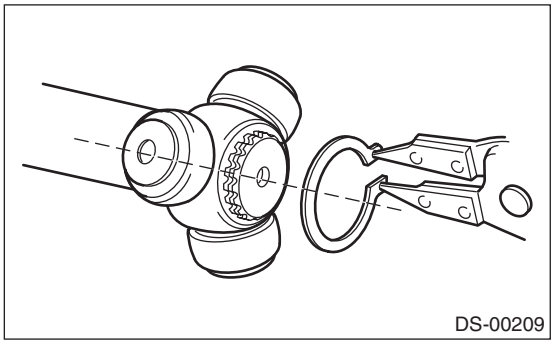

CAUTION:
Be sure to wrap shaft splines with vinyl tape to prevent boot from scratches.

10) Remove the PTJ boot.

11) Place the drive shaft between wooden blocks and set it on a vise.

CAUTION:
Do not set the drive shaft on a vise directly. Be sure to use wooden blocks.

12) Lift the boot band tabs using a screwdriver and hammer.

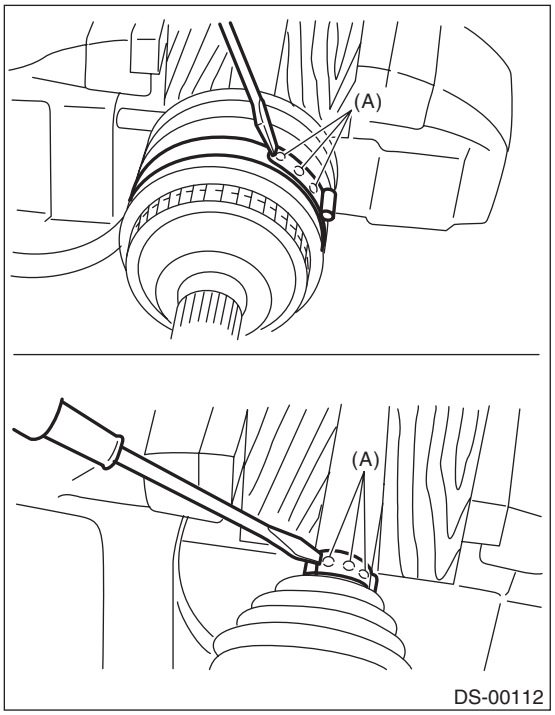

(A) Boot band tab

13) Disconnect the boot and remove it.

CAUTION:
Always replace the boot with a new part when removed.

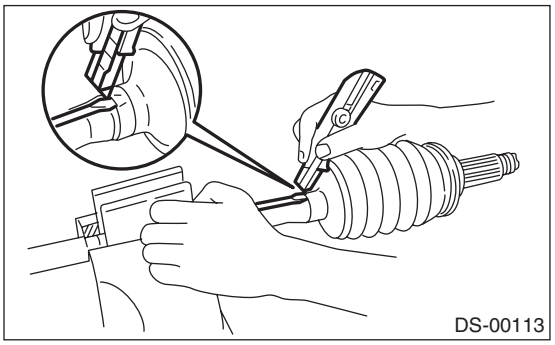

NOTE:
The BJ is a non-disassembly part, so the axle disassembly stops here.

2. BJ+DOJ-TYPE

1) Straighten the bent claw at the larger end of the DOJ boot.

2) Loosen the band by means of a flat tip screwdriver or pliers, being careful not to damage the boot.

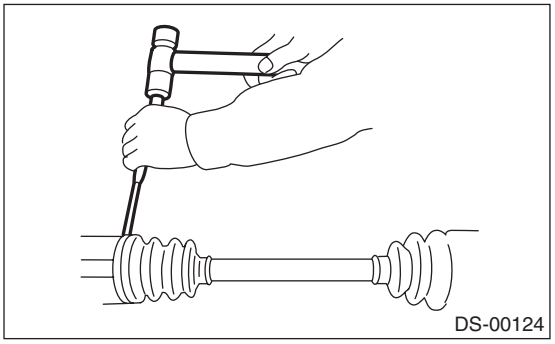

3) Remove the boot band on the small end of DOJ boot in the same manner.

4) Remove the larger end of DOJ boot from DOJ outer race.

5) Pry and remove the round circlip at the neck of DOJ outer race with a screwdriver.

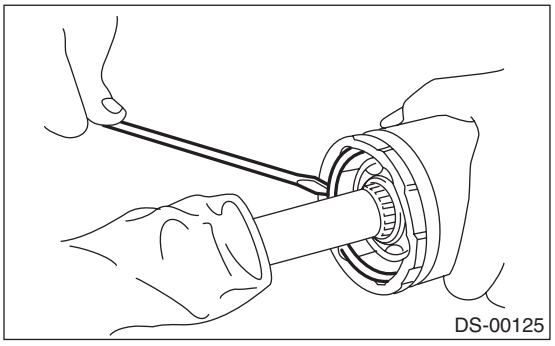

6) Take out the DOJ outer race from the shaft assembly.

7) Wipe off the grease and take out the ball bearings.

NOTE:
- The grease is a special grease (grease for constant velocity joints). Do not mix with other greases.
- Disassemble exercising care not to lose balls (6 pcs).

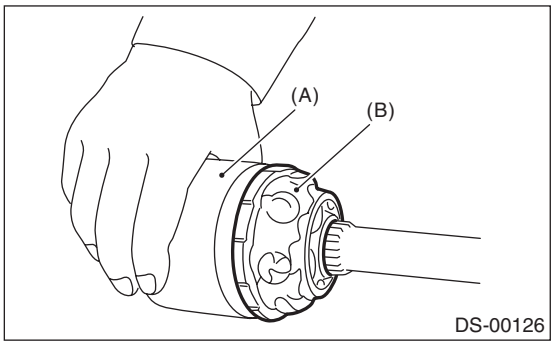

(A) Outer race
(B) Grease

8) To remove the cage from inner race, turn the cage by a half pitch to the track groove of inner race and shift the cage.
9) Using pliers, remove the snap ring fixing the inner race to the shaft.
10) Take out the DOJ inner race.
11) Take off the DOJ cage from shaft and remove the DOJ boot.
12) Wrap vinyl tape around the spline part of shaft.
13) Remove the BJ boot using the same procedures as for the DOJ boot.

NOTE:
The BJ is a non-disassembly part, so the axle disassembly stops here.

D: ASSEMBLY

1. BJ+PTJ-TYPE

NOTE:
Use specified grease.

BJ side:
NTG2218-M (Part No. 28395AG030)

PTJ side:
NKG302 (Part No. 28495AE010)

1) Set BJ boot and small boot band on the BJ side of shaft.

CAUTION:
Be sure to wrap shaft splines with vinyl tape to protect the boot from scratches.

2) Set the drive shaft on a vise.

CAUTION:
Do not set the drive shaft on a vise directly. Be sure to use wooden blocks.

3) Apply a thin coat of specified grease [60 to 70 g (2.12 to 2.47 oz)] to the BJ.
4) Apply an even coat of the specified grease [20 to 30 g (0.71 to 1.06 oz)] to the entire inner surface of boot. Also apply grease to the shaft.

NOTE:
The BJ installing surface of BJ boot shall be cleaned completely so as to be free from grease and other substances.

5) Attach the boot protrusion on the BJ groove.

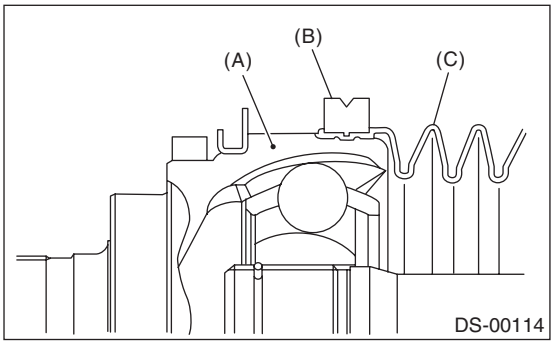

(A) BJ
(B) Large boot band
(C) Boot

6) Set the large boot band in the specified position.
7) Attach the boot protrusion on the shaft groove.

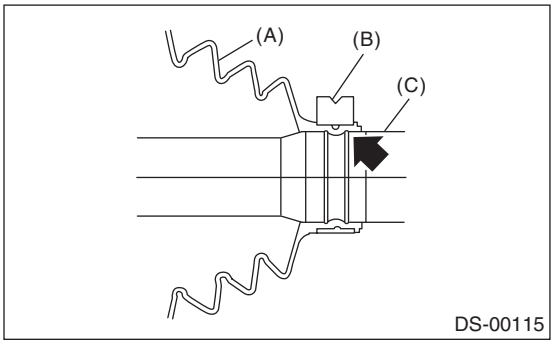

(A) Boot
(B) Small boot band
(C) Shaft

8) Tighten the boot bands using ST, torque wrench and socket flex handle.
ST 28099AC000 BOOT BAND PLIER

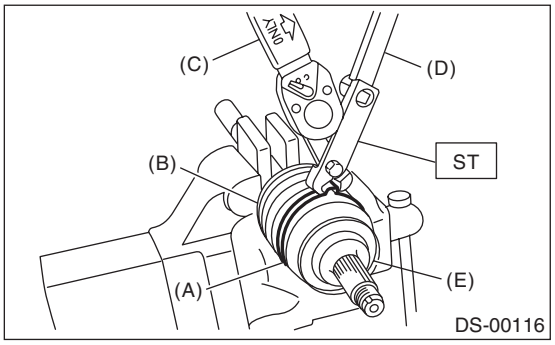

(A) Large boot band
(B) Boot
(C) Torque wrench
(D) Socket flex handle
(E) BJ

Tightening torque:
Large boot band
157 N·m (16.0 kgf-m, 116 ft-lb) or more
Small boot band
133 N·m (13.6 kgf-m, 98 ft-lb) or more

9) Place the PTJ boot at the center of shaft.
10) Align alignment marks and install the trunnion on the shaft.

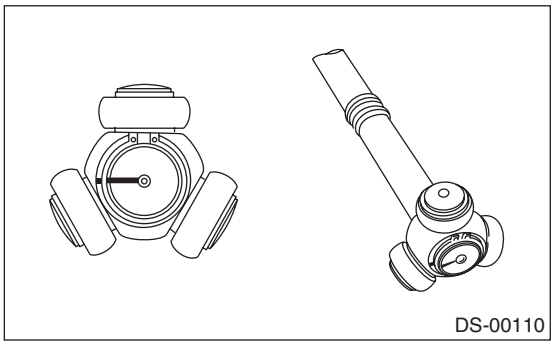

11) Install the snap ring to shaft.

CAUTION:
Confirm that the snap ring is completely fitted in shaft groove.

12) Fill 100 to 110 g (3.53 to 3.88 oz) of specified grease into the interior of PTJ outer race.
13) Apply a thin coat of specified grease to the roller kit and trunnion.
14) Align alignment marks on roller kit and trunnion and install the roller kit.

CAUTION:
Be careful with the roller kit position.

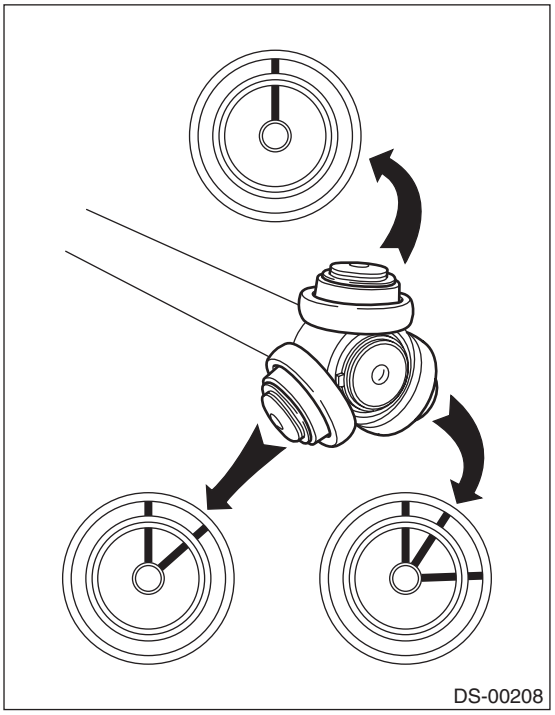

15) Align the alignment marks of the shaft and outer race, and install the outer race.

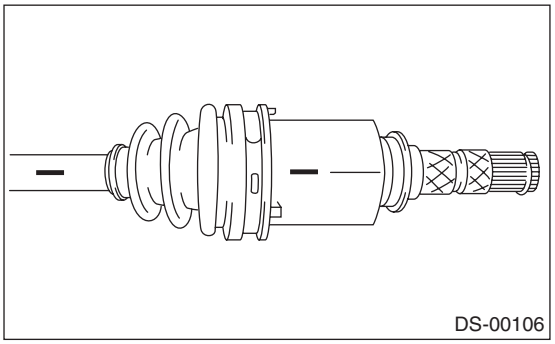

16) Install the snap ring in the groove on PTJ outer race.

CAUTION:
Pull the shaft lightly and assure that the snap ring is completely fitted in the groove.

17) Apply an even coat of the specified grease 30 to 40 g (1.06 to 1.41 oz) to the entire inner surface of boot.
18) Install the PTJ boot taking care not to twist it.

CAUTION:
- **The PTJ installing surface of PTJ boot shall be cleaned completely so as to be free from grease and other substances.**
- **When installing PTJ boot, position outer race of PTJ at center of its travel.**

19) Put a new band through the clip and wind twice in the band groove of the boot.
20) Tighten the band using the ST.
ST 925091000 BAND TIGHTENING TOOL

NOTE:
Tighten the band until it cannot be moved by hand.

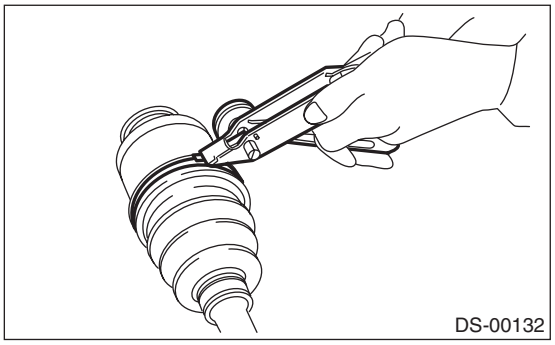

21) Tap the clip with the punch provided at the end of the ST.
ST 925091000 BAND TIGHTENING TOOL

CAUTION:
Tap to an extent that the boot underneath is not damaged.

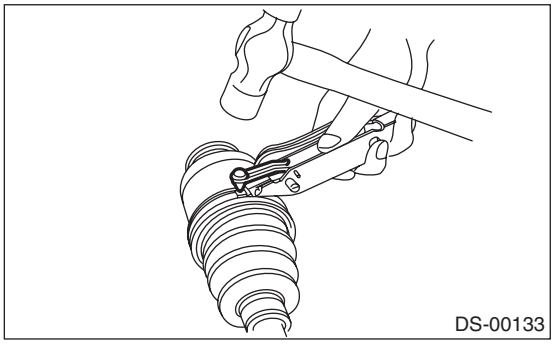

22) Cut off the band with an allowance of about 10 mm (0.39 in) left from the clip and bend this allowance over the clip.

CAUTION:
Make sure that the end of the band is in close contact with clip.
23) Extend and retract the PTJ to provide equal grease coating.

2. BJ+DOJ-TYPE

NOTE:
Use specified grease.

BJ side:
NTG2218-M (Part No. 28395AG030)

DOJ side:
NKG205 (Part No. 28495AG010)
1) Set BJ boot and small boot band on the BJ side of shaft.

CAUTION:
Be sure to wrap shaft splines with vinyl tape to protect the boot from scratches.

2) Set the drive shaft on a vise.

CAUTION:
Do not set the drive shaft on a vise directly. Be sure to use wooden blocks.
3) Apply a thin coat of specified grease [60 to 70 g (2.12 to 2.47 oz)] to the BJ.
4) Apply an even coat of the specified grease [20 to 30 g (0.71 to 1.06 oz)] to the entire inner surface of boot. Also apply grease to the shaft.

NOTE:
The BJ installing surface of BJ boot shall be cleaned completely so as to be free from grease and other substances.
5) Attach the boot protrusion on the BJ groove.

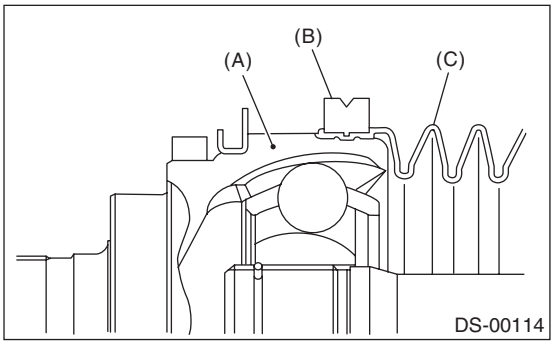

(A) BJ
(B) Large boot band
(C) Boot

6) Set the large boot band in the specified position.
7) Attach the boot protrusion on the shaft groove.

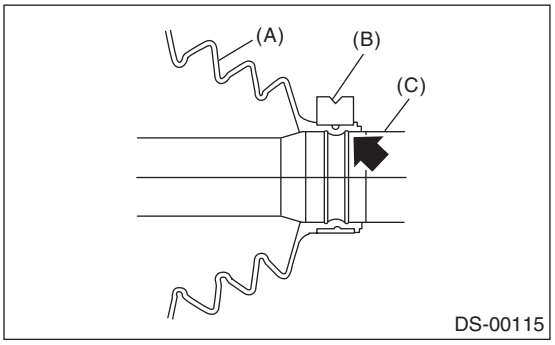

(A) Boot
(B) Small boot band
(C) Shaft

8) Tighten the boot bands using ST, torque wrench and socket flex handle.
ST 28099AC000 BOOT BAND PLIER

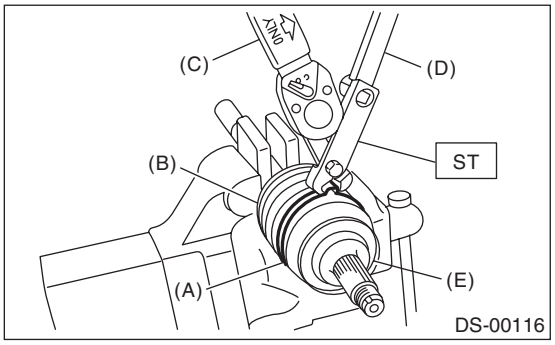

(A) Large boot band
(B) Boot
(C) Torque wrench
(D) Socket flex handle
(E) BJ

Tightening torque:
Large boot band
157 N·m (16.0 kgf-m, 116 ft-lb) or more
Small boot band
133 N·m (13.6 kgf-m, 98 ft-lb) or more

9) Place the DOJ boot at the center of shaft.
10) Insert the DOJ cage onto shaft.

NOTE:
Insert the cage with the cutout portion facing the shaft end, since the cage has an orientation.

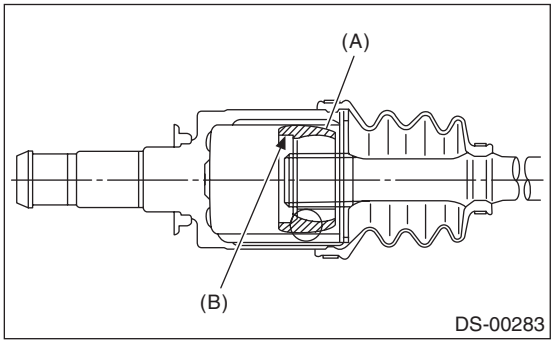

(A) Cage
(B) Cutout portion

11) Install the DOJ inner race on shaft and fix the snap ring in place with pliers.

NOTE:
Confirm that the snap ring is completely fitted in the shaft groove.

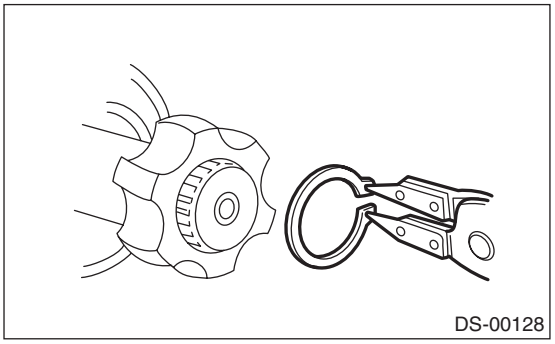

12) Install the removed cage, to the inner race fixed onto the shaft.

NOTE:
Fit the cage with the protruding section aligned with the track on the inner race, and turn by a half pitch.

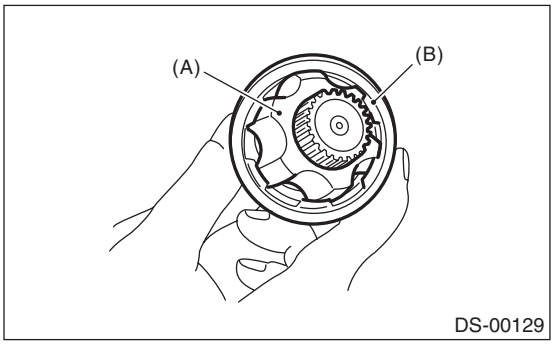

(A) Inner race
(B) Cage

13) Fill 80 to 90 g (2.82 to 3.17 oz) of specified grease into the inner side of the DOJ outer race.
14) Apply a thin coat of specified grease to the cage pocket and six ball bearings.
15) Insert the six ball bearings into the cage pocket.
16) Align the outer race track and ball positions, and place the shaft, inner race, cage and ball bearings in the original positions, and then fix outer race in place.

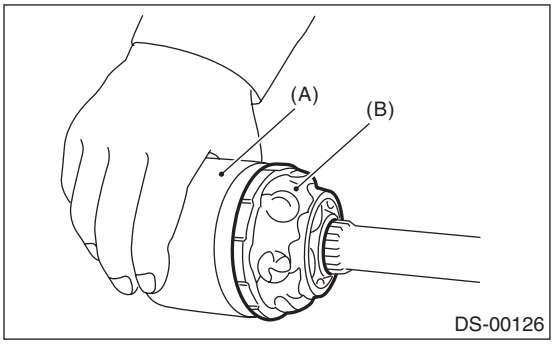

(A) Outer race
(B) Grease

17) Install the snap ring in the groove on the DOJ outer race.

NOTE:
- Assure that the balls, cage and inner race are completely fitted in the outer race of DOJ.
- Use care not to place the matched position of snap ring in the ball groove of outer race.
- Pull the shaft lightly and assure that the circlip is completely fitted in the groove.

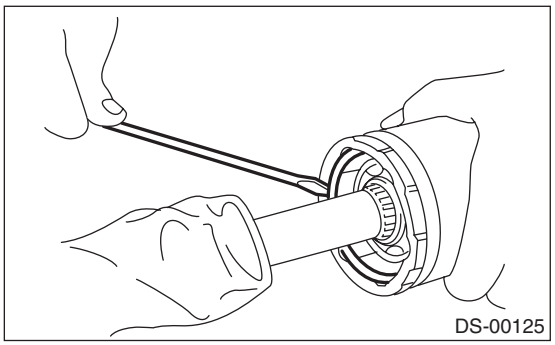

18) Apply an even coat of the specified grease [20 to 30 g (0.71 to 1.06 oz)] to the entire inner surface of boot. Also apply grease to the shaft.
19) Install the DOJ boot taking care not to twist it.

NOTE:
- The inside of the larger end of DOJ boot and the boot groove shall be cleaned so as to be free from grease and other substances.
- When installing the DOJ boot, position the outer race of DOJ at center of the stroke.

20) Extend and retract the DOJ to provide equal grease coating.
21) Put a new band through the clip and wind twice in the band groove of the boot.

NOTE:
When tightening boot, use care so that the air within the boot is appropriate.

22) Tighten the band using the ST.
ST 925091000 BAND TIGHTENING TOOL

NOTE:
Tighten the band until it cannot be moved by hand.

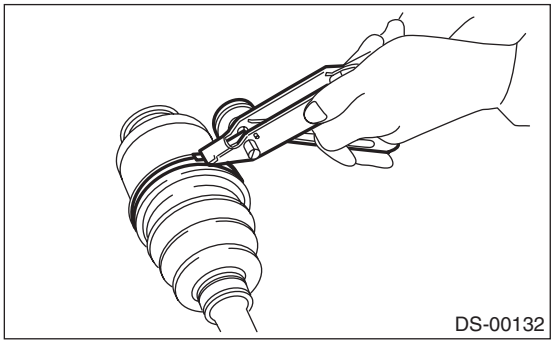

23) Tap the clip with the punch provided at the end of the ST.
ST 925091000 BAND TIGHTENING TOOL

NOTE:
Tap to an extent that the boot underneath is not damaged.

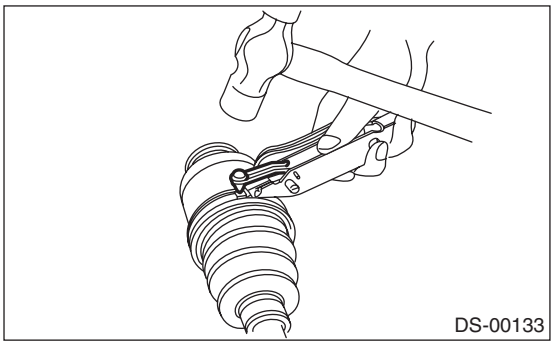

24) Cut off the band with an allowance of about 10 mm (0.39 in) left from the clip and bend this allowance over the clip.

NOTE:
Be careful so that the end of the band is in close contact with clip.

E: INSPECTION

Check the removed parts for damage, wear, corrosion etc. If faulty, repair or replace.
1) DOJ (Double Offset Joint)
Check for seizure, corrosion, damage, wear and excessive play.
2) PTJ (Pillow Tripod Joint)
Check for seizure, corrosion, damage and excessive play.
3) Shaft
Check for excessive bending, twisting, damage and wear.
4) BJ (Ball Fixed Joint)
Check for seizure, corrosion, damage and excessive play.
5) Boot
Check for wear, warping, breakage and scratches.
6) Grease
Check for discoloration and fluidity.